ALUCOBOND®

PROCESSING AND TECHNICAL DATA

Simply original, originally simple

3A COMPOSITES

CONTENTS

TRANSPORTATION, STORAGE
4 General

PANEL DIMENSIONING
5 General

PANEL INSTALLATION
6 General

INFORMATION ON SPECIAL SURFACES
7 Anodised, naturAL, mill-finished surfaces

PROCESSING METHODS
9 Sawing
11 Routing
12 Water jet cutting
12 Punching / shearing
13 Bending

ROUTING AND FOLDING TECHNIQUE
15 General
16 Machines
17 Tools
19 Fabrication of tray panels
21 Fabrication of attica corners 90° in two segments

JOINTING / FIXING TECHNIQUE
24 General
24 Thermal expansion and contraction
25 Drilling / countersinking
26 Riveting
27 Screwing
28 Gluing
31 Clamping

SURFACE TREATMENT
32 General

CLEANING AND MAINTENANCE
33 General
33 Removal of graffiti

FACADE - STANDARD DESIGNS
35 General

TECHNICAL DATA SHEETS
37 ALUCOBOND® PLUS
38 ALUCOBOND® A2

INTERNET ADDRESSES, INFORMATION, CREATE THE DIFFERENCE
40 Internet addresses
42 Information
43 Create the difference

TRANSPORTATION, STORAGE

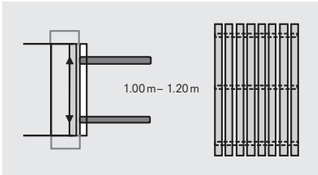

Set maximum fork width

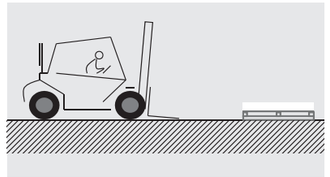
Pick up the pallet, slightly raise the fork

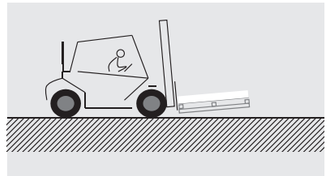
Pick up the complete pallet, do not draw nor push

GENERAL

To protect ALUCOBOND® composite panels against mechanical damages and the harmful effects of weather conditions and moisture, the following information must be observed:

- The pallets must be handled carefully during transport and unloading. (Caution: Do not handle open pallets).
- Upon delivery the pallets must be examined for any damage due to transportation and moisture
- ALUCOBOND® panels that have become wet must be dried to avoid any spots or corrosion forming. Any damage must be reported immediately and confirmed by the forwarding agent.
- Store the pallets so that they are protected against any wetness penetrating due to rain and spray water and avoid any condensation forming (e.g. when transporting cold panels to warmer rooms).
- Store the pallets stacked one over the other (do not store ALUCOBOND® panels standing vertically) with a maximum of 6 pallets of the same format stacked on top of each other (heavy pallets at the bottom).
- Individual panels must be lifted off the pallet by two people holding all four corners and not drawn over each other. Carry the panels vertically. Wear gloves to avoid staining.
- When stacking panels, nothing should be put in between to avoid markings.

To ensure perfect functioning of the ALUCOBOND® protective film, the following information should be observed:

- Storage exceeding 6 months should be avoided. Severe temperature fluctuations and exposure to direct sunlight reduce the long-term durability. In this case the protective film may become very difficult to remove.
- Do not mark the protective film with inks (markers), tapes or labels. Solvent or plasticizer may penetrate the film and affect the lacquered surface.
- Should the protective film partially come off during processing or after assembly, dirtied edges can occur in the course of time, which may be difficult to remove.
- Remove the protective film as soon as possible after assembly. Protective film that remains on the panels for an extended period of exterior exposure may be very difficult to remove.
- Make sure not to remove the protective film at temperatures below 10°C.

PANEL DIMENSIONING

WHEN DIMENSIONING THE PANELS, THE FOLLOWING SHOULD BE NOTED

Dimensional tolerances (Standard)

Due to manufacturing, a displacement of the cover sheets sidewise at the panel edges up to 2 mm is possible.
Thickness ±0.2 mm (mill-finish | stove lacquered | anodized)
Width -0 / +4 mm
Length 2000 – 4000 mm -0 / +6 mm
Length 4001 – 6800 mm -0 / +10 mm

When cutting and routing, the thermal expansion in length of ALUCOBOND® must be taken into account to ensure the dimensional accuracy of the components during assembly. We recommend that prior to processing the panels should be stored at room temperature for at least one day.

Trimming

The panels have to be trimmed:

- on all sides, to ensure accurate rectangularity and precisely cut edges when using raw edges, such as e.g. with the riveted façade version.
- on three sides, to ensure accurate rectangularity for further processing.

The trimming cuts must be taken into account when dimensioning the panel.

Anodised contact lines

Anodised ALUCOBOND® composite panels have contact lines on the short sides – of up to 25 mm width on the front and up to 35 mm width on the back.

With panel lengths of more than 3.5 m, contact lines of up to 20 mm width must also be taken into account at the longitudinal edges.

Panel edges

Due to the manufacturing process a lateral displacement of the cover sheets of max. 2 mm is possible at the panel edges.

Static calculation of elements

- For static values, please see the Technical Data Sheets
- For static tables, please ask for details

PANEL INSTALLATION

Protective film with direction arrows

WHEN INSTALLING THE PANELS, THE FOLLOWING SHOULD BE NOTED

Assembly direction

To avoid possible ref lection differences (except for solid colours), it is essential to install the panels in the same direction as marked on the protective peel-off-foil. Colour variations may occur between panels originating from different production batches. To be sure of homogeneous colouring, the total requirement for a project should be ordered in one batch, i.e. the front of a building should be composed of panels of one batch only (see pallet label or stamp on the reverse side).

Batch No. on the reverse side

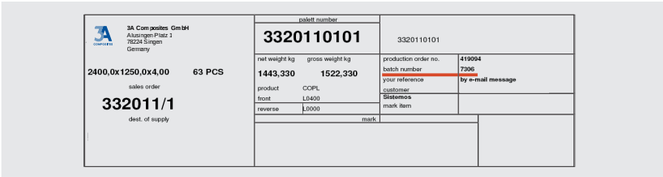

Batch No. on the pallet label

Fixing elements without jamming

Linear expansion coefficient of ALUCOBOND® 2.4 mm/m/100°C

- The minimum gap depends on the expected expansion of the panel
- Larger hole diameters in the panel must be taken into account when fixing the panel with screws and rivets
- Holes in the panel and in the substructure must be drilled centrically (use drilling jigs)
- Distance between panel and rivet head 0.3 mm (use rivet attachment jigs)
- Be careful not to over-tighten the screws on the panel
- Arrange the butt joints of the supporting sections at the panel joints to avoid jamming due to opposing thermal expansion

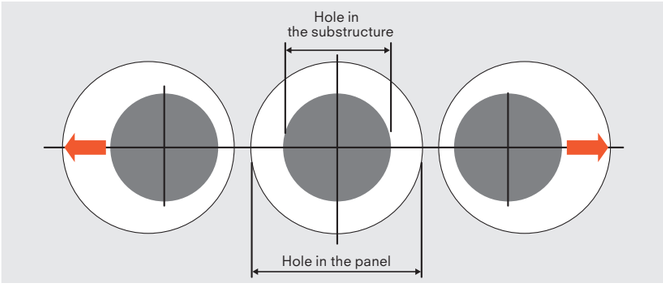

Centrical drilling

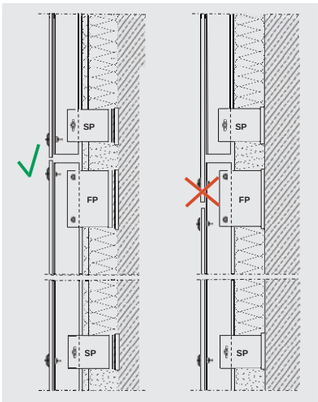

Fixed points and sliding points on the sub structure

- For fixing the supporting sections, pay attention to fixed point holders (FP) and sliding point holders (SP).
- Joints in the substructure must be taken into account when fixing facade elements. They must not be skipped, i.e. the façade elements must not be fixed to the lower or upper supporting section! Butt joint of supporting section = panel joint

INFORMATION ON SPECIAL SURFACES

Anodised surfaces

During the anodising process an artificial oxide layer is produced on the aluminium surface. This takes place in a liquid medium with a defined bath composition under direct and alternating current.

Anodized aluminum parts are used for a great range of exterior and interior applications due to their corrosion resistance and decorative effect for. Even over prolonged periods (> 30 years), the layer of oxidation is only minimally reduced and the protective effect of anodically generated oxide layers is not impaired. These properties, however, are only retained for a longer period, if a sufficiently thick oxide layer has been built up and is well compacted on an aluminium material that is suitable for anodising. Additionally, the elements must be cleaned in such a way that the corrosive impact is also taken into account.

According to DIN 17611, anodised ALUCOBOND® and ALUCOBOND® PLUS composite panels are anodised, semi-finished products made of aluminium with an anodised layer thickness of at least 20 µm for exterior applications. Quality assurance during the production of the panels according to DIN EN ISO 9001, ensures a high-quality, final product.

Bending and folding anodized panels can result in micro cracks and fading may occur in that area. If this is not desired, enamelled ALUCOBOND® anodized look composite panels, whose surfaces comply with the anodizing industry standard EURAS, can be folded or bent without problems.

naturAL surfaces

3A Composites has introduced an innovative coating – ALUCOBOND® naturAL – that permanently preserves the natural, aluminium surface. During the rolling process this allows "brushed" structures to be produced, for example, with a clearly higher surface brilliance than we know of stainless steel.
The surface is not only weather-resistant but also insensitive to perspiration (finger prints). Cleaning only need occur in more regular intervals in highly corrosive environments (e.g. near the coast or in industrial environments). In most cases, clean water will then be sufficient for cleaning and will prevent accumulation of salt or any other pollutants.

Owing to the production process, ALUCOBOND® naturAL Reflect produces a slightly iridescent effect in artificial light. Therefore, for interior applications – please inquire – a Reflect surface with a modified structure may be advisable. Due to the high degree of reflection of the underlying surface – as compared to conventionally pigmented lacquering – the coating is exposed to almost double the UV radiation. For this reason, the resistance of ALUCOBOND® naturAL surfaces is reduced in the case of inclined planes and applications between latitudes of 20°N and 20°S.

Mill-finished surfaces
When using ALUCOBOND® panels with mill-finished surfaces that are not protected from atmospheric influences through coating or anodising, a variation in the appearance of the aluminium surface must be taken into account.

The untreated, mill-finished aluminium surface – on which no decorative demand should be made, acquires a natural oxide layer; in the course of time the thickness increases to approx. 0.1 µm under the influence of the outer atmosphere.

When coated with reaction products, the surface shows a reduced reflectivity compared to its state when new, i.e. the surface loses its metallic brilliance taking on a dull, light-grey appearance. This impression may be intensified when dirt gathers in and on the surface. This graying constitutes a natural patina.

Whereas the reactions of uncoated aluminium to atmospheric influences change the appearance of the surface, the stability of the ALUCOBOND® panel is not impaired, as the reactions only have an effect on the panel surface, and the oxide layer protects the material underneath from any further corrosion.

It is virtually impossible to clean untreated, aluminium construction parts in exterior architecture, but this is not necessary as a rule, due to the readily accepted surface change and also its high resistance to weathering.

The protective film should not be removed until all the necessary work has been completed. After removal, make sure to wear gloves, as this will avoid leaving any finger prints that are almost impossible to remove afterwards.

PROCESSING METHODS

SAWING WITH VERTICAL PANEL SAWS
- **Holz-Her vertical panel saws with routing device**
  When purchasing a new system we recommend the following panel saw:
- **Holz-Her panel saw**, PK 1255 ALUCOBOND®, with pole-changing motor (2 speeds)

Please pay attention: saw blade – Ø 250 mm

Retrofitting existing machines
Since 1991 Holz-Her panel saws have been equipped with dustproof bearings. On older machines, the saw shaft and the casing cover need to be exchanged and the routing device newly ordered. Owing to the speed regulation from 4,800 to 2,400 rpm, retrofitting to a 2-speed, pole-changing saw motor will be required.

When ordering new machines or pole-changing saw motors, and for retrofitting with dustproof bearings, please contact Reich Spezialmaschinen GmbH directly, stating the year of construction, type and serial number of the machine.

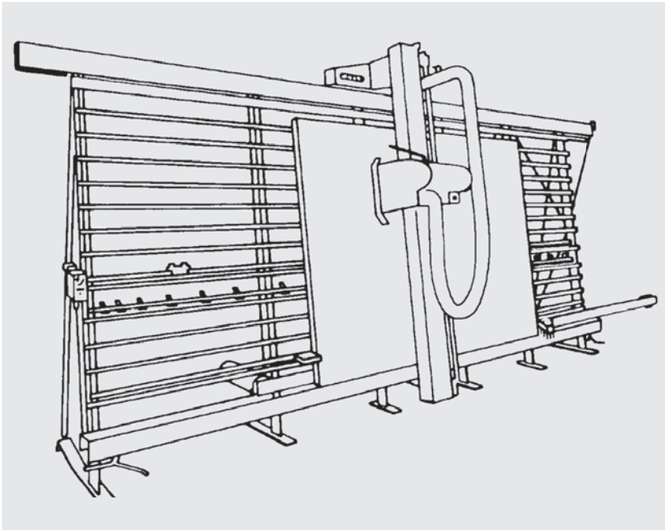

Vertical panel saw

Striebig vertical panel saws with routing device
When purchasing a new system we recommend the following panel saw:
- **Striebig panel saw,** Standard II for ALUCOBOND® with 2-speed, pole-changing motor (please include when ordering)

Please pay attention: saw blade – Ø 300 mm

Retrofitting existing machines
Since 1993 Striebig saws have been equipped with dustproof bearings. On older machines, a dustproof tracing roller bearing flange must be provided for. Owing to the speed regulation from 4,800 to 2,400 rpm, retrofitting to a 2-speed, pole-changing saw motor will be required.

When ordering new machines or pole-changing saw motors and for retrofitting to dustproof bearings, please contact Striebig AG directly, stating the year of construction, type and serial number of the machine.

DUST EXTRACTOR SYSTEMS FOR CIRCULAR PANEL SAWS
We recommend a dust extractor with filter shaker for sawing and milling ALUCOBOND® A2 and ALUCOBOND® PLUS, for example:
AL-KO POWER UNIT 200P/250P for ALUCOBOND® A2 and ALUCOBOND® PLUS (mobile system)
- **AL-KO ECO-JET 3A/3A XL** (stationary system)

Important when ordering: With ECO-Jet standard systems the connecting branch is arranged on the right-hand side. Other branch sides please specify when ordering.
- **SCHUKO Vacomat 200XP** (mobile system) with special equipment for ALUCOBOND® A2 (please specify when ordering)

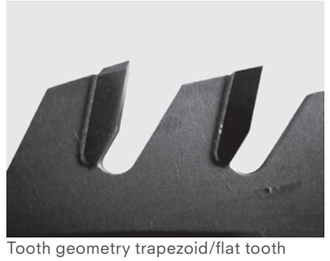
Tooth geometry trapezoid/flat tooth

Stack cutting

SAW BLADES FOR CIRCULAR PANEL SAWS
Saw blades for ALUCOBOND®
- carbide tipped circular saw blades, trapezoid/flat tooth
- flat teeth 45° chamfered for burr-free edges
- saw blade – Ø = 300 mm for Striebig saw, type Standard II
  t = 72 (for stack cutting), **purchase order No. 181724 (LEUCO)**
  purchase order No. 10170331 (AKE)
  t = 96 (for neat single cuts), **purchase order No. 181725 (LEUCO)**
  purchase order No. 10170330 (AKE)
- saw blade – Ø = 250 mm for Holz-Her saw, type PK 1255 ALUCOBOND®
  t = 60 (for stack cutting), **purchase order No. 181726 (LEUCO)**
  purchase order No. 10170328 (AKE)
  t = 80 (for neat single cuts), **purchase order No. 181727 (LEUCO)**
  purchase order No. 10170329 (AKE)
- bore – Ø = 30 mm
- clearance angle 15°
- speed 5,000 rpm
- tooth thickness 3.2 mm
- rake angle 10° positive

Saw blades for ALUCOBOND® PLUS and ALUCOBOND® A2
- carbide tipped circular saw blades, trapezoid/flat tooth
- flat teeth 45° chamfered
- saw blade – Ø = 300 mm for Striebig saw, type Standard II
  purchase order No. 10168187 (AKE)
- diamond saw blade – Ø = 300 mm
  purchase order No. 10170336 (AKE)
- saw blade – Ø = 250 mm for Holz-Her saw, type PK 1255 ALUCOBOND®
  purchase order No. 10168158 (AKE)
- diamond saw blade – Ø = 250 mm
  purchase order No. 10170332 (AKE)

- bore – Ø = 30 mm
- t = 72 (Ø = 300 mm)
- t = 60 (Ø = 250 mm)
- tooth thickness 3.2 mm
- clearance angle 15°
- rake angle 10° positive

- speed 5,000 rpm (using 2,400 rpm = ½ speed , possible on Striebig and Holz-Her panel saws with variable speed motors, can prolong the blade service life significantly)
- feed, single cut 25 m/min
  stack cut 20 m/min (3 – 4 panels)

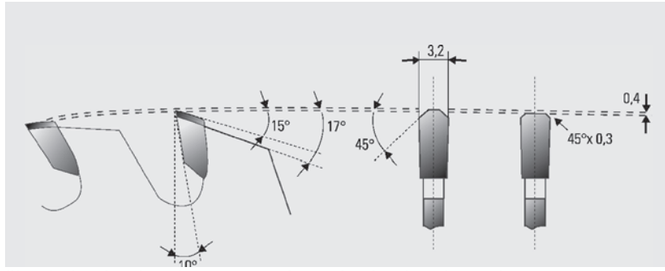

Sketch showing the edge geometry for professional re-sharpening

SAWING WITH HAND-HELD CIRCULAR SAWS
Machine
- For hand-held circular saws, the appropriate cutting speed for ALUCOBOND® processing must be observed:
- **FESTOOL hand-held circular saw**, type TS 55 EB Q-Plus-FS, speed 2,000 – 5,200 rpm

With ALUCOBOND® PLUS and ALUCOBOND® A2 please pay attention to the speed reduction!

Tools are not included in the scope of supply. Please order separately:
- **FESTOOL carbide tipped saw blade**, trapezoid/flat tooth, rake angle positive, saw blade – Ø 160 mm, t = 48, **purchase order No. 496308**

SAWING WITH JIG SAWS
Machine
Use hand-held jigsaws with pendulum stroke

Tools – ALUCOBOND®
Saw blades for wood and plastics, tooth pitch = 2.5 mm for precision cuts, e.g. Bosch saw blade T101B

Tools – ALUCOBOND® PLUS and ALUCOBOND® A2
Saw blades for aluminium, tooth pitch = 2 mm, e.g. FESTOOL saw blade HS 60/2 bi

Jig saw blades

ROUTING
ALUCOBOND® can be easily routed on conventional routing machines and CNC machining centres. To avoid pressure marks on the surface, please use plastic or wood vice jaws when chucking the work-pieces. Preferably use vacuum tables with MDF boards as sacrificial boards.

Single flute cutter with right-hand twist

Carbide tipped cutters suitable for aluminium and plastics are also suitable for ALUCOBOND®. Perfect cuts are produced, e.g. under the following conditions: feed 5 m/min., speed 24,000 rpm.

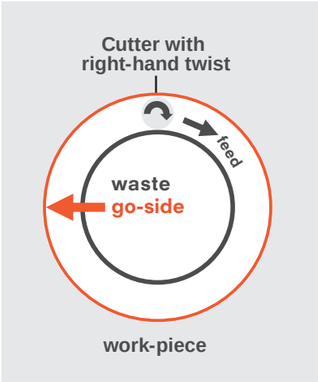

Panel = work-piece, feed in clockwise direction

Cut shape = work-piece, feed in anticlockwise direction

Suitable cutters for contour cutting of ALUCOBOND®:
- Single flute cutter, series F113 (GIS)
- solid carbide metal
- right-hand twist
- polished flute

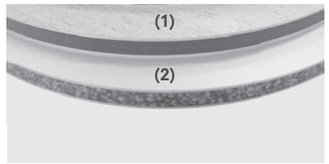

(1) ALUCOBOND® PLUS,
(2) ALUCOBOND® A2

WATER JET CUTTING

Cut abrasively when using a water jet cutting machine. Pre-drilling of the panels is necessary when starting the cut in the middle of a panel as it is not possible to drill through with the water jet. For clean cut edges, the routing method should preferably be used.

PUNCHING / SHEARING

Punching

ALUCOBOND® panels of any thickness can be punched using conventional sheet metal punching machines. For clean cuts use sharp tools and dies with minimal cutting clearance (0.1 mm). This cutting process will cause a slight deflection of the cover sheet.

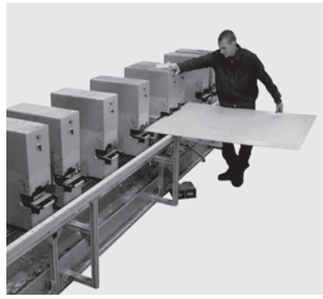

Multi-station machine

Multi-station machines (Liechtblick)
Series punching of, for example, tray panels can be realised efficiently using multi-station machines.

Perforating (for interior applications only)
ALUCOBOND® panels can be perforated using CNC punching machines. This is often used for interior and ceiling design. Holes of a minimum diameter of 4 mm can be punched. The minimum width of web between hole edges is also 4 mm. The best results will be obtained using a punch

die for single punching. Multi-station machines are more economical. After punching, the flatness will possibly require further processing.

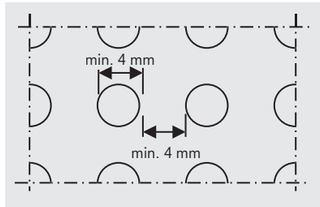

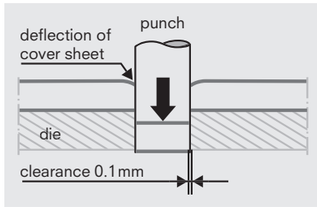

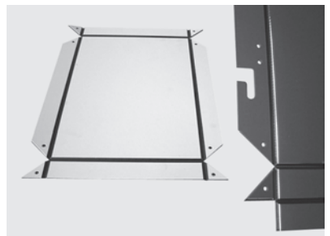

Punching tray panels

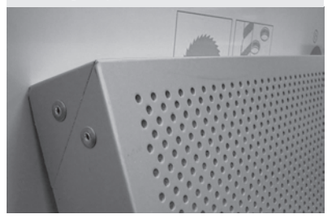

Punching holes

Shearing

ALUCOBOND® can be sheared with a conventional guillotine. A shearing angle of ≤ 1,5° and minimum clearance (paper test) are the prerequisites for the best possible quality of the cut.

To prevent damage to the cover sheet, it is appropriate to provide the down-holders of the guillotine with protective rubber pads.

Important: Cutting or shearing ALUCOBOND® panels for applications where cut edges are visible (e.g. riveted facades) is not suitable for decorative requirements.

BENDING

ALUCOBOND® can be formed by conventional metal fabrication methods. Certain specific points should be noted relating to the multilayer structure combining materials of different properties. The minimum bending radius is for :

Material	ALUCOBOND® PLUS	ALUCOBOND® A2
Standard	10 x d	25 x d
ALUCOBOND® naturAL	200 mm	200 mm
Anodized	300 mm	–

(d = panel thickness)

The spring-back effect experienced when folding sheet metal is larger with ALUCOBOND®. For production series a prototype should be made.

To prevent the surfaces from being damaged, the protective film must not be removed during processing. Additionally, the visible surface can be protected by using plastic pads of 1-2 mm thickness.

Attention: When bending ALUCOBOND® with an anodised surface, the bent area is brighter.

Bending with a roll bending machine
ALUCOBOND® can be bent using sheet metal roll bending machines – mainly with three and four-roll machines. Please make sure that the feeder does not exert too much pressure.

Bending rollers which are also used for bending other metals must be thoroughly cleaned from swarf before processing ALUCOBOND®. We recommend ground rollers to avoid damaging the cover sheets.

Rounded elements and edges (e.g. tray panels) can be bent using special roll bending machines. The depth of the edge depends on the radius. Please ask for details.

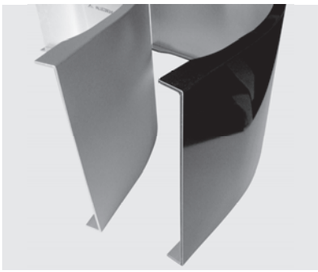
Elements rounded / folded

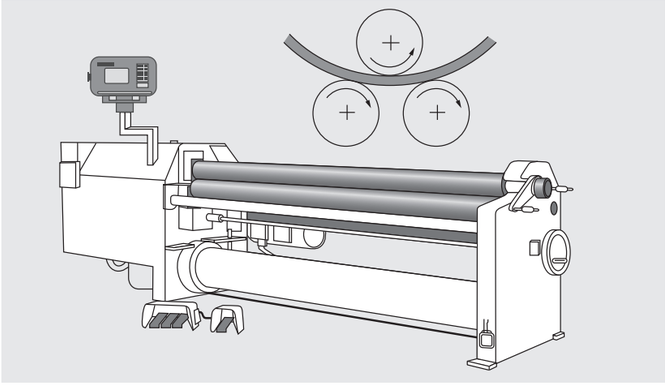
Bending with a roll bending machine

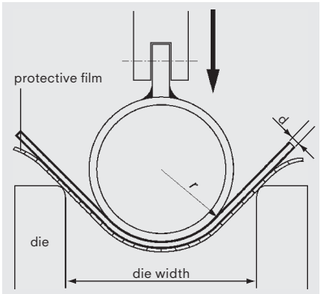

Bending with a brake press

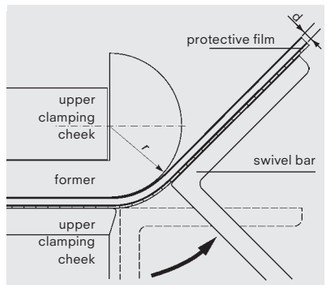

Bending with a folding machine

Bending with a brake press
ALUCOBOND®, like sheet metal, is easily formed with a brake press. The air-bending process is used when forming with a brake press.

The ALUCOBOND® panel rests on the edges of the die (rails, U-sections) and is bent by the punch (tube or shaft). The bending angle is determined by the width of the die and the stroke of the punch. The die edges should be rounded and smooth.

Ideal die width:
2 x d + 2 x protective film thickness + punch diameter + 15 mm

The minimum side length of the bent part should be 5 times the ALUCOBOND® thickness.

Bending with a folding machine
When working with folding machines, the panel to be bent is clamped between two cheeks. The projecting edge is bent around the upper clamping cheek or former using the movable swivel bar. The bending radius is determined by interchangeable formers attached to the upper clamping cheek.

ROUTING AND FOLDING TECHNIQUE

GENERAL
ALUCOBOND® composite panels can be shaped by means of a simple processing technique. This procedure, the routing and folding technique, enables a production of folded elements in different shapes and sizes.

V-shaped or rectangular grooves are routed on the rear of the ALUCOBOND® panels using disk or end milling cutters, whereby the aluminium cover sheet at the front and part of the polyethylene core are retained. The small thickness of the remaining material then allows folding by hand. A brake press is not required. The shape of the groove determines the edge radius. The grooves can be produced with a panel saw with routing device for ALUCOBOND®, on a CNC machining centre, with a panel routing machine or a hand routing machine. The routing and folding technique can be used for composite panels of all standard surfaces.

Routed / folded elements

Advantages
- The convincing advantages of the routing and folding technique are:
- Minimum investment
- Simple operating technique
- Folding need not be done in the workshop, it can be done on site; this means low transport costs
- Low-cost manufacture of shaped parts like façade elements, frames, fascia claddings and roof edgings, corner pieces and many more are possible
- Versatile formability
- Good economy
- Shapes are not restricted by machine dimensions.
- Tension-free folding, therefore no buckling in the corner area and thus even elements.

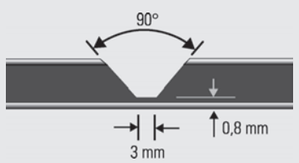

Groove (V-shaped) for edges up to 90°

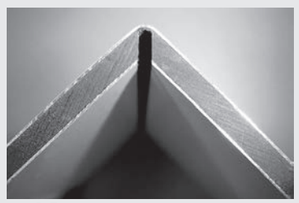
r ~ 2-3 mm

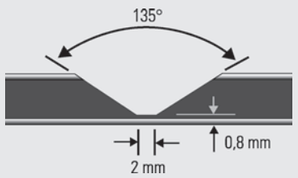

Groove (V-shaped) for edges up to 135°

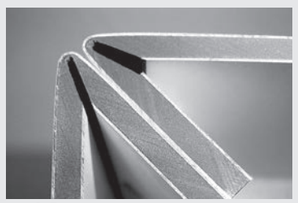
r ~ 2-3 mm

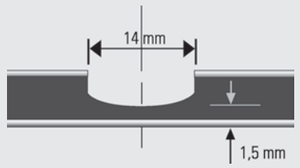

Rectangular groove for edges up to 180° depending on panel thickness
Not suitable for ALUCOBOND® A2

r = 7 mm

Important: With ALUCOBOND® with anodised surface and ALUCOBOND® with naturAL Reflect surface, the formation of micro-cracks leads to brightening in the edges.

MACHINES FOR ROUTING AND FOLDING TECHNIQUE

Vertical panel saws with routing device for routing ALUCOBOND® (special accessory)

- **Holz-Her vertical panel saw**, PK 1255 ALUCOBOND®
- **Striebig**, vertical panel saw, Standard II for composite panels

Other panel saws with a special routing device can also be supplied or retrofitted by the manufacturer. If necessary, the frame has to be raised.

For inquiries relating to
- new machines with accessory parts for routing ALUCOBOND®
- possible retrofitting of existing machines (stating machine type/No. and year of construction)
- accessories such as cutter disks, tracing rollers, etc.

Please contact the manufacturer of the panel saws.

Important: For inquiries and orders, please add "for processing ALUCOBOND® composite panels".

Important:
General information regarding the routing and folding technique
- Processing temperature: During folding, the ambient and material temperature should not be below 0°C.

For ALUCOBOND®A2
- Tracing rollers: Make sure to use tracing rollers with dustproof bearings.
- Speed 2,400 rpm (= ½ speed with panel saws of Striebig and Holz-Her)
- Feed max. 20 m/min. Pay attention to a constant feed.
- Routing of rectangular groove not possible.

CNC machining centres
Series production of ALUCOBOND® components can be carried out very economically on CNC machining centres.
Depending on the equipment of the machines, various processing steps can be performed: sawing, milling (routing and folding), contour cutting, drilling.

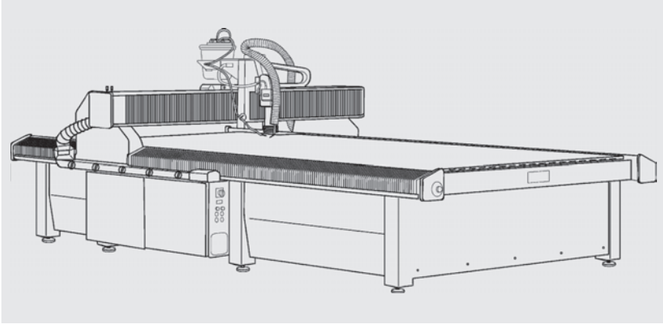

MACHINES FOR ROUTING AND FOLDING TECHNIQUE

Festool panel routing machine PF 1200 E-Plus ALUCOBOND®
Supplied with:
- Tracing roller for 4 mm
- Cutter disk for V-grooves 90°
- Adjustment template
- Transport box

Panel routing machine PF 1200 E-Plus

Hand routing machines
Commercially available hand routing machines with a minimum rating of 800 W are suitable.

Mobile dust extractors
E.g. Festool mobile dust extractors, types CTM approved for dust class M for dust with MAK values > 0.1 mg / m³ for sheet milling machines, hand routers and hand-held circular saws.

TOOLS FOR ROUTING AND FOLDING TECHNIQUE

Carbide tipped disk milling cutters for vertical panel saws
With a nominal panel thickness, the diameters of tracing rollers and cutter discs are adjusted so as to leave a residual core thickness of 0.3 mm (V-groove) or 1 mm (rectangular groove). The dimensions given in the drawings show the cover panel thickness of 0.5 mm plus the corresponding residual core thickness.

For inquiries relating to disc milling cutters with indexiable inserts recommended for processing ALUCOBOND® PLUS and ALUCOBOND® A2 for **Holz-Her panel saws** (type PK 1255 ALUCOBOND®, number of teeth = 8, cutter disk outer dia. = 244 mm), please contact Reich, Holz-Her or LEUCO.

For ordering disk milling cutters with indexable inserts V-groove 90° and V-groove 135° as well as the corresponding tracing rollers for all types of **Striebig panel saws**, please contact Striebig AG.

When ordering please state type of panel saw and year of construction.

Carbide tipped disk milling cutters for vertical panel saws

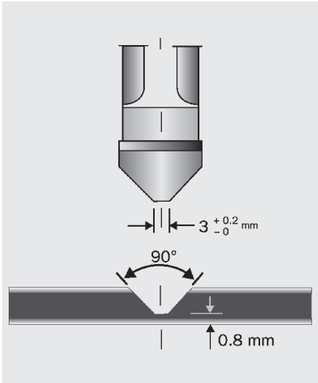

Disk milling cutter for V-grooves 90°

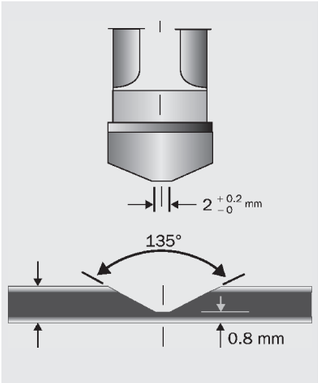

Disk milling cutter for V-grooves 135°

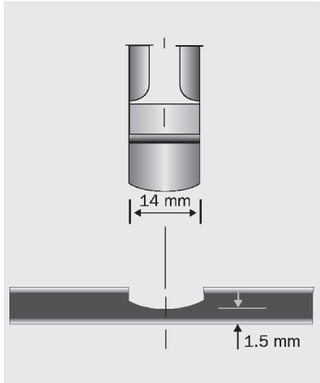

Disk milling cutter for rectangular grooves

Milling cutters with cylindrical shank for hand routing machines

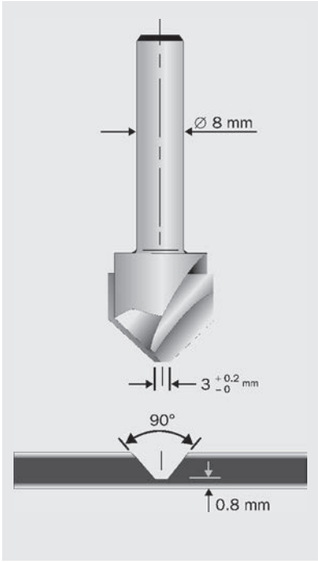

End milling cutter for V-grooves 90°
Carbide tipped cutter No. 491 444 (Festool)
Carbide tipped cutter No. FV09.01.090 (GIS)
Carbide tipped cutter No. 79 803 (KWO)

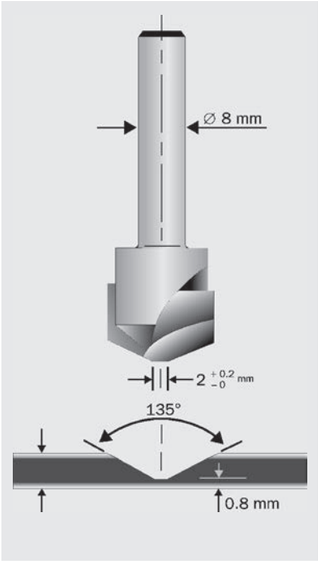

End milling cutter for V-grooves 135°
Carbide tipped cutter No. 491 443 (Festool)
Carbide tipped cutter No. FV09.01.135 (GIS)
Carbide tipped cutter No. 79 804 (KWO)

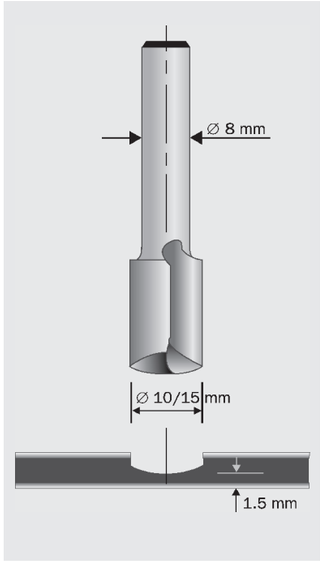

End milling cutter for rectangular grooves
HSS cutter Ø 10 mm No. 79800(KWO)
HSS cutter Ø 15 mm No. 79801(KWO)

FABRICATION OF TRAY PANELS

Determination of the measures of periphery and routing measures

The measures of periphery and the routing measures are determined on the basis of the drawing measures (final measures). In this case, approx. 1 mm per edge is deducted from the final measure. The total of the routing measures results in the cutting measure. In any case, the final measures should be checked using a test strip prior to series production. Then the limit stops of the panel saw can be adjusted to obtain elements of identical sizes.

Determination of the cutting measure

Example ALUCOBOND® roof edge:
Total of routing measures = cutting measure = 1292 mm

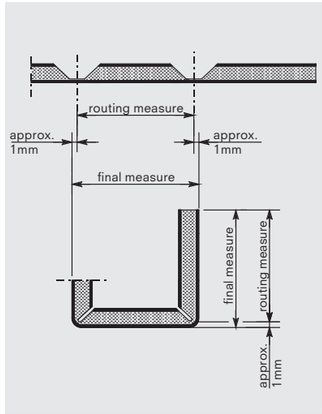

Determination of the routing measure

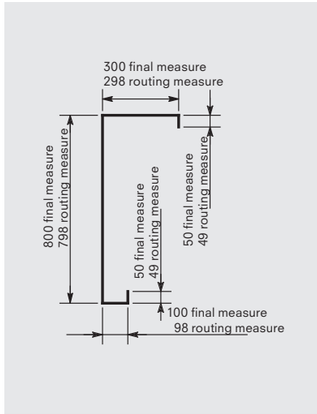

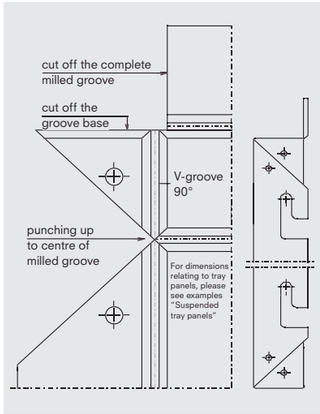

Adjustment of punch depth

Adjustment of the punching depth when punching corners

In order to obtain perfectly closed tray corners, the machine settings indicated in the sketch must be observed.

For clean cuts use sharp tools and dies with minimal cutting clearance (~ 0.1 mm).

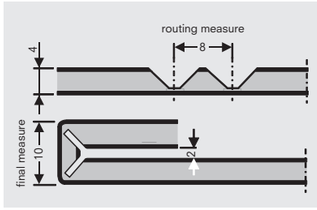

Minimum double folds

Bending aids

For easy folding of ALUCOBOND®, particularly in the case of narrow folds processed according to the routing and folding technique, we recommend bending aids that can be produced of ALUCOBOND® butt joint sections and panel strips.

- Butt joint section
  Section No. 31343
- Butt joint section
  Section No. 31344

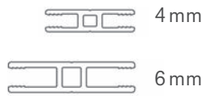

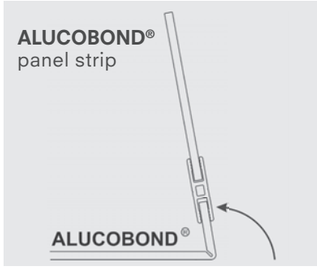

Folding sequence for fabricating tray panels

(1) Cut V-grooves according to the above instructions

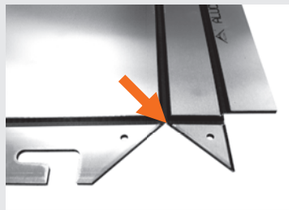

(2) Fold the narrow side more than 90°

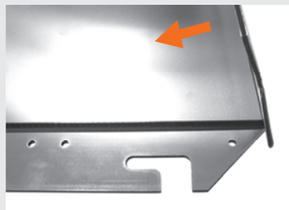

(3) Fold back to a little more than 90° and slightly fold the triangle

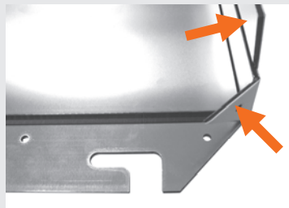

(4) Fold the triangle together with the longitudinal edge

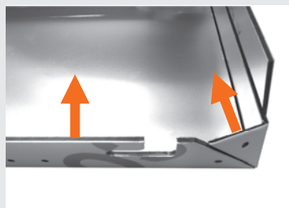

(5) Folding the upper edges

Owing to the pre-stressing when folding more than 90°, the two edges of the V-grooves fit tight.

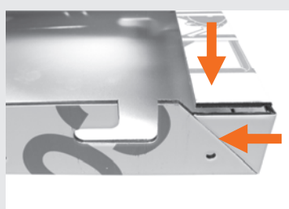

FABRICATION OF ATTICA CORNERS 90° IN TWO SEGMENTS

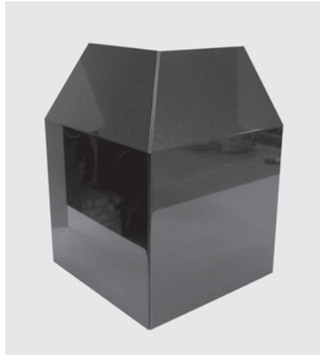

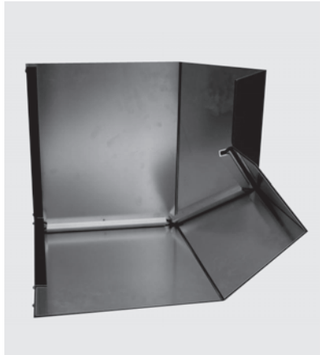

For further examples relating to roof edges and fascia cladding please see the CD "Architecture in detail"

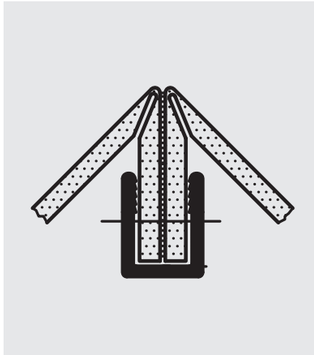

Connection of folds, 30 mm,
Section No. 24 569

Example: Determination of the measure of periphery

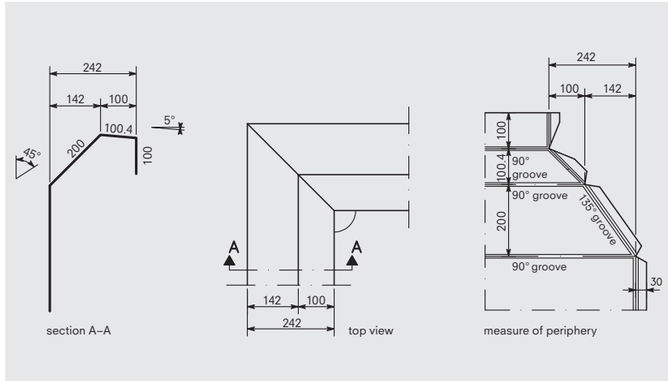

Routing the folding grooves on vertical panel saws

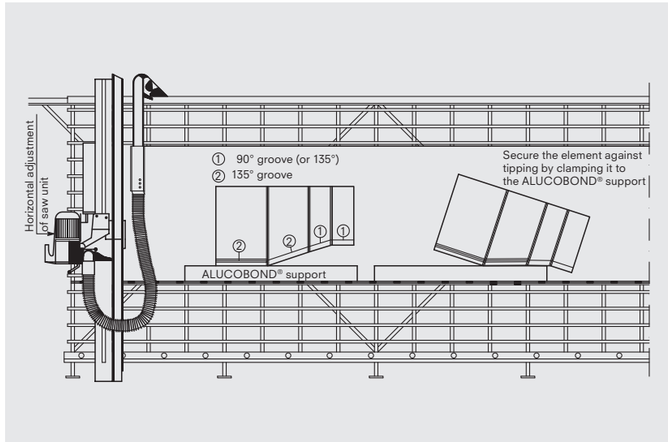

Processing steps

(1) Marking the measures on the reverse side of the two corner parts according to the example on page 19

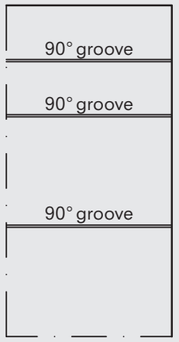

(2) Vertical routing of the measures of periphery

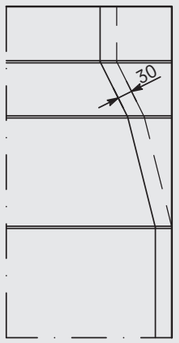

(3) Precisely cut off the contours along the outer line of the fold (centre line of groove + 30 mm fold depth) using a jig saw. When doing so make sure to clamp together the front sides of the two corner pieces.

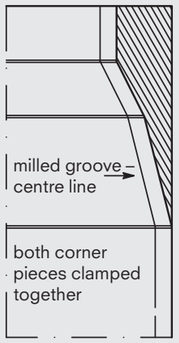

ROUTING AND FOLDING TECHNIQUE

(4) Routing the grooves parallel to the cut edges at a distance of 30 mm

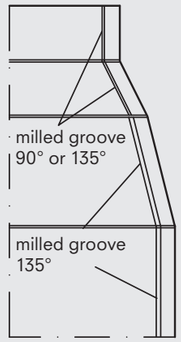

(5) Notching the folds using a 90° notcher

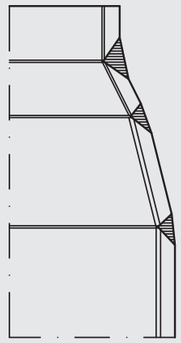

(6) Assembly
- Insert the sealing tape 2 x 30 mm made of PE or neoprene
- Connect the two corner pieces in the vertical area with section 24 569
- Rivet the edging section to the folds
- Bend the folds and inclined parts
- Unfold the corner element
- Join the folds in the inclined area by folding up section 24 569 verbinden
- Additionally secure the element by screwing the folds

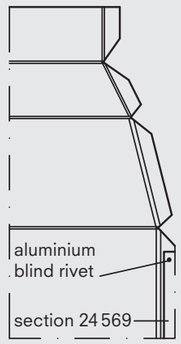

JOINTING / FIXING TECHNIQUE

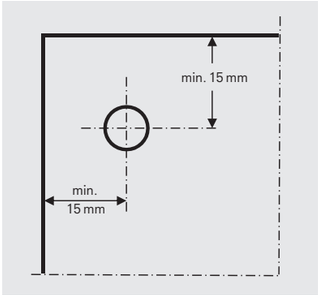

Distances from the edge

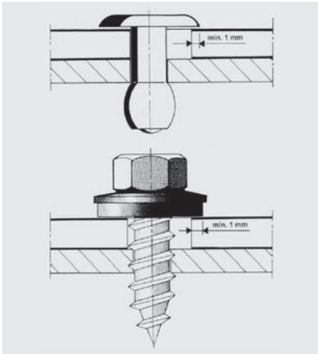

Overlapping the hole edge

GENERAL

To avoid any tension occurring in the rivet and screw connections, the rivets and screws must be set tension-free. The bore holes in the panels must be large enough to allow for the expected thermal expansion. The linear, thermal expansion of ALUCOBOND® is 2.4 mm at a panel length of 1 m and a temperature difference of 100°C.

According to the general construction regulation approval No. Z-10.3-774 of the DIBt (Deutsches Institut für Bautechnik/German Institute for Construction Technology) in Berlin, the determination of the temperature difference is based on an assembly temperature of + 20°C and the extreme temperatures specified in the building regulations. Regardless of this, however, a reduced temperature difference of T = 10°C may be expected in the direction of the supporting sections in the case of an aluminium substructure, if the façade panels and the substructure are in direct contact with each other, i.e. there is no thermal separation.

Drilling jigs (MBE) are used for drilling holes centrically in the ALUCOBOND® panel and for centrically setting the rivet or screw. In the case of visible fixations and surfaces with high gloss finishes, particular care must be taken when aligning the substructure and setting the rivets and screws.

Important: The protective film should principally be removed in the area of the rivet or screw head prior to riveting or screwing.

THERMAL EXPANSION AND CONTRACTION

Material	Linear thermal expansion coefficient α_T (m/°C)	Expansion at 1 m panel length/width and 50°C temp. difference
PVC	~ 70 x 10^{-6}	3.5 mm
ALUCOBOND®	24 x 10^{-6}	1.2 mm
Aluminium	24 x 10^{-6}	1.2 mm
Steel	12 x 10^{-6}	0.6 mm
Concrete	12 x 10^{-6}	0.6 mm
Wood	5 x 10^{-6}	0.25 mm

Maximum heating of the panel approx. 70°C (measured at a black panel at an air temperature of 40°C).

1 m x 3 m panel as an example
Expected heating of the panel max. 70 °C
Assumed assembly temperature 20 °C
Temperature difference Δ t = 50 °C

Calculation
2.4 mm x 3 (m) x 0.5 (Δ t = 50 °C) = 3.6 mm panel expansion, i.e. half of the panel expansion must be expected on the opposite panel edges.

- The total expansion must be accounted for when mounting the panels on aluminium substructures transverse to the direction of the supporting section.
- At least the total expansion must be accounted for when mounting on wooden substructures.

A temperature difference of 10°C may be assumed parallel to the direction of the supporting section, from the front side to the reverse side of the panel in the case of an aluminium substructure, i.e the panel expands with the aluminium substructure (see general construction regulation approval No. Z-10.3-774 of the DIBt [Deutsches Institut für Bautechnik/German Institute for Construction Technology] in Berlin).

The thermal expansion is calculated as follows
2.4 mm x 3 (m) x 0.1 (Δ t =10 °C) = 0.72 mm

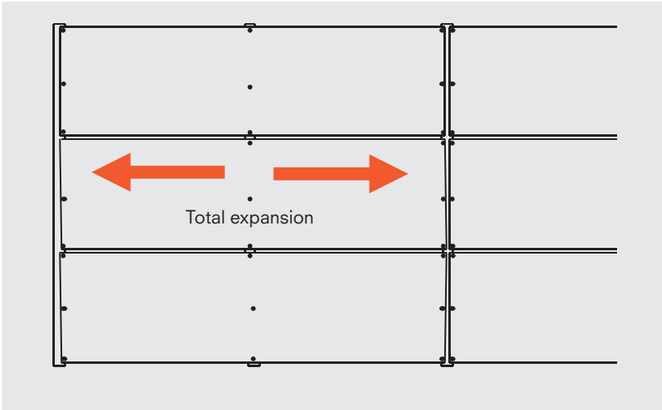

Expansion transverse to the direction of the supporting section and with wooden substructure vertical/horizontal.

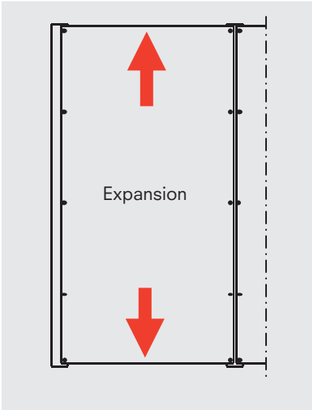

Expansion in the direction of the supporting section (aluminium substructure) accord. to the general construction regulation approval, factor 0.1 (10°C temp. difference)

DRILLING / COUNTERSINKING

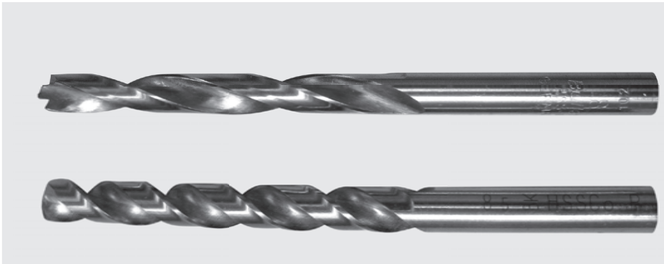

Countersinks are used for countersinking the hole and for widening larger holes.

ALUCOBOND® can be drilled with twist drills Standardally used for aluminium and plastics. The following drills are particularly suitable:
- Drills with centring-point, e.g. Extreme 2TM HSS -G metal drill DIN 338 of De Walt
- Stainless steel drills HSS Cobalt DIN 338DIN 338 von Fa. De Walt

Top: Conical drilling jig, **centre:** drilling jig for hole = Ø 8.5 mm, **bottom:** rivet attachment jigs for rivet head dia. 11 and 14 mm mountable on riveting tool AccuBird (MBE)

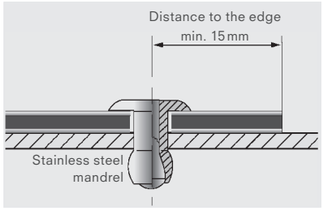

Blind rivet with standard head

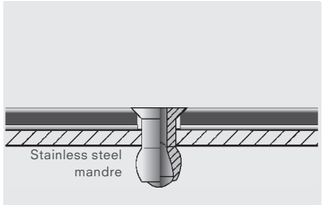

Countersunk rivet (for indoor use only)

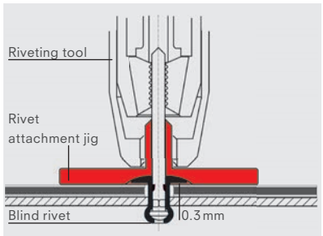

Important: During riveting many factors may have an influence on the exact tolerance of the rivets of 0.3 mm (e.g. rivet head tolerance). Therefore, we recommend that you make a test on a façade panel. Please always remove the protective film in the riveting area prior to riveting.

RIVETING

ALUCOBOND® panels can be fastened together or joined to other materials with rivets common to aluminium constructions.

For outdoor use and for use in areas of high humidity, aluminium blind rivets with stainless steel mandrels should be used to prevent ugly corrosive edges. When using aluminium blind rivets with steel mandrels, the mandrel should drop out after riveting (detachable version).

Countersunk rivets are suitable for indoor use only..

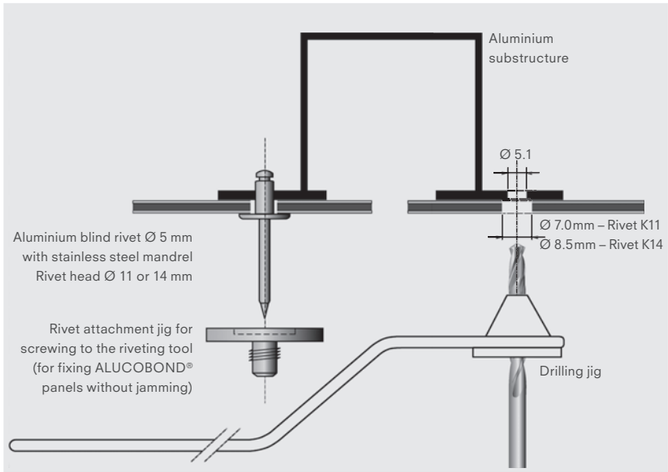

For outdoor use please note:

- For outdoor use, aluminium blind rivets are used that have been approved for construction, and have a 5 mm shaft diameter and a rivet head diameter of 11 or 14 mm.
- Please take the thermal expansion of the panel into account (2.4 mm/m/100°C). To avoid jamming, the hole in the panel must be large enough to allow for the expected expansion.
- With the shaft of the rivet fitting closely to the edge of the hole, the rivet head must cover over 1 mm of the area surrounding the hole.
- Drilling jigs are used for centrically drilling holes into the panel and the substructure and for centrically setting the rivet.
- Rivet attachment jigs are used for setting blind rivets without jamming allowing for a tolerance of 0.3 mm. Make sure to use rivet attachment jigs and rivets from the same manufacturer, as the height of the rivet head according to Din 7337 may vary.
- The clamping thickness results from the thickness of the material to be riveted plus an additional value of 2 mm to ensure that the closing head is perfectly formed. In accordance with this clamping thickness the corresponding shaft length is determined in the tables provided by the rivet manufacturers (L min. = 14 mm).

THREADED FASTENERS

Screws on metal substructures

Commercially available fascia screws that have been approved for construction, made of stainless steel, with sealing washer (e.g. EJOT, SFS Stadler, etc.) are used for metal substructures. The screws must be suitable for the corresponding substructure (please note the information given by the manufacturer).

The screws should be tightened with a torque wrench or screwdriver such that the EPDM sealing washer is placed on the panel for sealing the bore hole without exerting any pressure to the panel. If the sealing washer is visibly deformed or if the rubber seal laterally protrudes beneath the washer, an expansion of the panel is no longer possible which may result in a slight deflection of the cover sheet around the sealing washer.

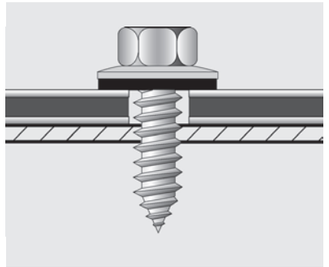

Correct setting of fascia screws: Sealing washer without deformation – the panel can move under the washer.

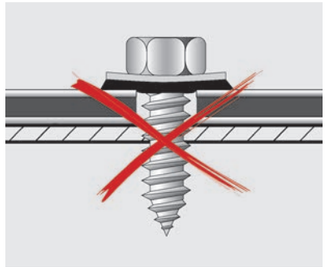

Incorrect setting of fascia screws: The sealing washer is deformed – the panel cannot expand.

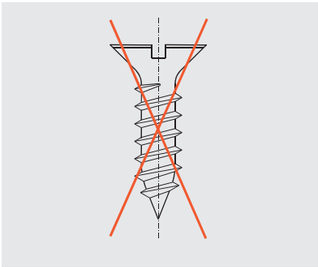

Do not use countersunk screws for outdoor application!

EJOT Drilling screws with centring sleeve

EJOT drilling screws JT4-FR-2H/6, 4.8 x 22 mm with centring sleeve are suitable for ALUCOBOND® panel thickness 4 mm and aluminium substructures with a web thickness of 2 mm.

EJOT Drilling screws with centring sleeve

Screws for fixing SZ 20 and blue clip tray panels on aluminium substructures

Fascia screw **(1)** with Torx head for top-hat section 35953 and supporting sections with flange thickness 3 mm, diameter 5.5 – 6.3 mm, stainless steel, with head or stainless steel sealing washer, diameter 14 mm (Z-14.1-537).

For supporting sections with a flange thickness of 2 mm we recommend the drilling screw EJOT JT4-3H (2), diameter 5.5 mm.

Screws for connecting aluminium wall brackets and aluminium stiffeners

Drilling screw EJOT JT4-3H/5-5.5x19, diameter 5.5 mm, head diameter 13 mm, stainless steel **(2)** or comparable screw (SFS / Mage).

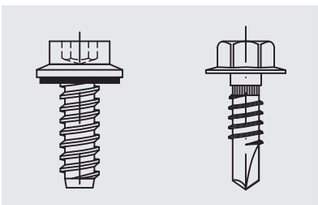

(1) Fascia screw **(2)** Drilling screw

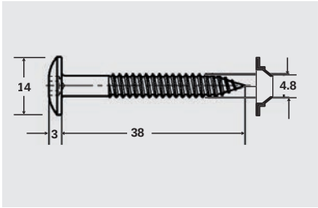

Pan head

Screwing on wooden substructures
Commercially available fascia screws made of stainless steel are used. The screws must be suitable for the wooden substructure (please note the information given by the manufacturer). The substructure must be pre-drilled. Bore holes in the wooden substructure must be drilled centrically to the bore holes in the panel using a drilling jig.

The screws should be tightened such that the screw head sits on the panel without exerting any torque or pressure on it (preferably using a cordless screwdriver). With wooden substructures, particular attention should be paid to the material's softness.

Planed, glued, laminated timber should be used for the substructure. The entire surface of the wood must be covered with a non-compressible sealing strip.

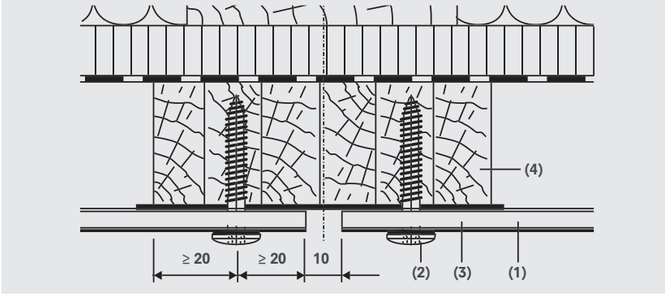

(1) ALUCOBOND®, **(2)** Fascia screw 4.8 x 38 – K14, **(3)** Aluminium sealing strip or EPDM sealing strip, **(4)** Glued laminated timber, min. 40 x 80 mm

GLUING
Metal adhesives / universal adhesives, tapes, Velcro tapes
For indoor use, trade fair/exhibition stand structures, mechanical engineering, etc. commercially available metal/universal adhesives or double-sided adhesive tapes are used according to the particular application.
So-called Velcro tapes are available for detachable joints, e.g. SCOTCH MATE or Dual Lock (3M).

Please note:
- Adhesives or structural sealants do not adhere to the ALUCOBOND® core.
- All-over lamination of ALUCOBOND® panels (one side) to other materials may result in the deformation of the laminates (differing expansion/ bimetal effect).
- As with mechanical fastening, special care is required when processing or installing high-gloss and/or dark surfaces.
- Regarding the application and use of adhesives/tapes, please observe the manufacturers' instructions and regulations.
- Training has to be carried out in accordance with the building supervision approvals of the adhesives manufacturers.

Fixation of ALUCOBOND® by means of gluing
The fixation of ALUCOBOND® façade panels using structural sealants is approved by the building authorities:

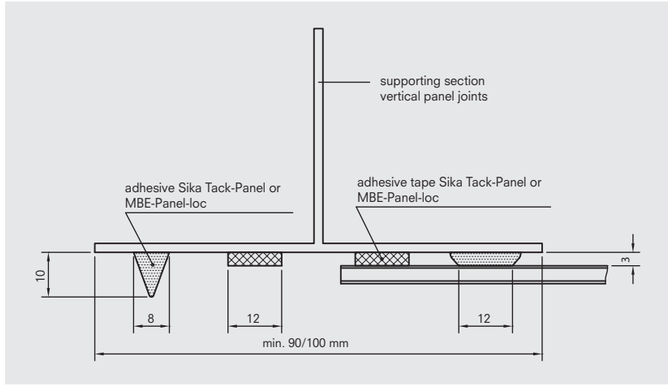

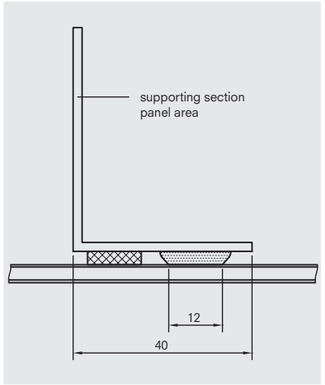

Bonding ALUCOBOND® to stiffeners
- The fixation of stiffeners using adhesives enables the fabrication of tray panels in larger sizes.
- For mounting façade cladding, the gluing must not be applied as the sole means of fixation.
- Forces acting on the stiffener must be conducted to the substructure in an appropriate way.
- If the adhesive should fail, it must be ensured that nobody is endangered by any falling façade elements.
- When positioning the stiffeners horizontally, the adhesive must be protected against standing water.
- For bonding mill-finished aluminium stiffeners to bright-rolled and primed reverse sides of ALUCOBOND® panels, 3A Composites GmbH recommends using permanently elastic, structural sealants or double-sided, adhesive tapes.
- The use of OMEGA sections is recommended.
- For the products Sika Tack Panel of Sika Chemie and MBE Panel-loc of MBE GmbH bonding with ALUCOBOND® has been approved. For the approval the building authorities took into account the corresponding processing instructions.
- As an alternative a double side acrylic foam tape can be used. Therefore the product tesa® ACX^{plus} 70200 thickness 2 mm can be inserted. The performing company has to be instructed by tesa SE. After the required contact pressure the bond is fixed and resistant for handling. The adhesive tape is only intended for workshop bonding.

Type of section	Aluminium stiffeners
Adhesive	- **SikaTack Panel System,** one-component - PUR – structural sealant, general national building approval: Z-36.4-18 - **MBE Panel-loc,** MS polymer structural sealant, general national building approval: Z-10.8-350 - **tesa® ACXplus 70200,** Thickness 2 mm - **3M VHB Structural Cladding Tape W20F,** European approval ETA -10/0149
Cleaning agent	- **Sika Aktivator 205** - **MBE Adhesive Cleaner** - **tesa® e.g. Isopropanol** - **3M IPA Cleaner 08986** or - **3M Heptane Cleaner**
Primer	- **SikaTack-Panel Primer** - Not required with MBE - **tesa® 60150 Adhesion Promoter** - **3M Primer 94**
Adhesive tape, Thickness 3 mm, width 12 mm (for fixing the sections to the panels and for ensuring the precise adhesive thickness)	- **SikaTack-Panel fitting tape** - **MBE Panel-loc adhesive tape** - Not required with 3M and tesa®

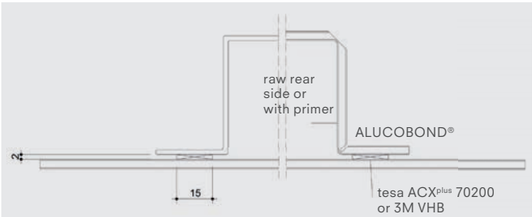

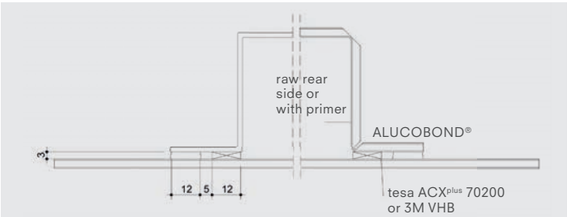

BONDING/FIXING STIFFENERS
Facade, tray panelsSZ 20

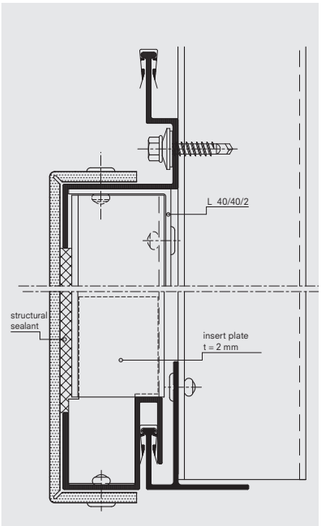

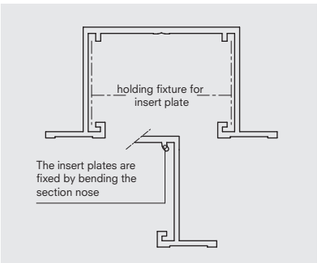

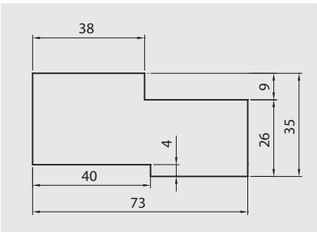

Façade, tray panels suspended on bolts

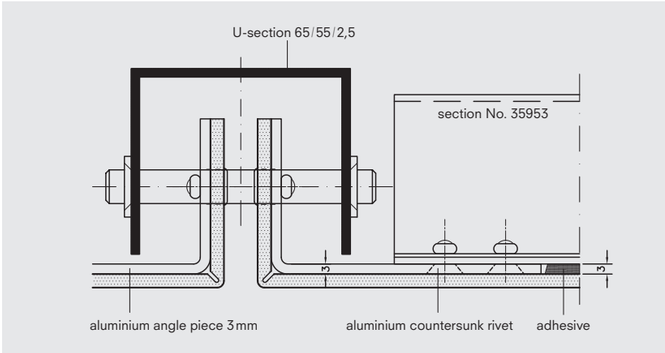

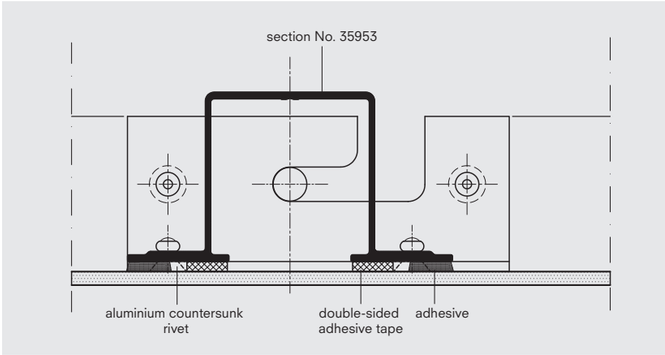

CLAMP CONNECTIONS
ALUCOBOND® elements can be clamped e.g. with double "top hat" sections or glass strips, such as with mullion/transom facades. Please pay attention to the design specifications according to the construction approval.

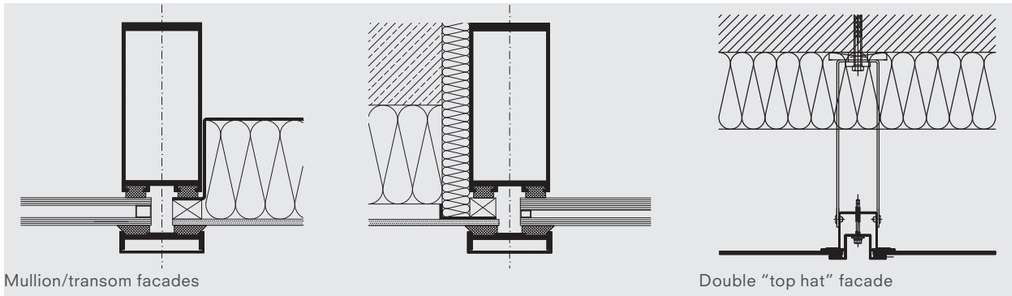

SURFACE TREATMENT

LACQUERING MILL-FINISHED ALUCOBOND® SURFACES OR PRIMED REVERSE SIDES OF ALUCOBOND® A2

The composition of lacquer coating for ALUCOBOND® is basically the same as those for mill-finished aluminium surfaces. However, it is advisable to be familiar with coating systems and materials as well as working methods for aluminium.

Lacquer coating on stove-lacquered fluorocarbon surfaces is not possible.

Please note:

- The maximum permissible temperature of the material (ALUCOBOND® panels) must not exceed 70 °C when applying fast-drying methods. During the drying process at high temperatures the panels must be positioned with great care to prevent deforming.
- ALUCOBOND® cut edges should not be in contact with organic solvents for a longer period to avoid weakening the bond.
- ALUCOBOND® panels lacquered at a later stage should not be bent or folded. The lacquer in the bends or folds may be damaged due to the low elasticity of the top coat.
- Upon request, we can name you lacquer suppliers who are able to apply lacquer that can be bent and folded.
- Only inferior lacquer adhesion can be achieved on core material exposed at cut edges.
- Please make a test prior to lacquering and follow the instructions of the lacquer suppliers.

Further information

For general information on painting, lacquering and coating of aluminium we recommend the leaflets on "02, 03 surfaces" issued by Gesamtverband der Aluminiumindustrie e. V. (GDA), www.aluinfo.de.

CLEANING AND MAINTENANCE

CLEANING AND MAINTENANCE OF STOVE-LACQUERED SURFACES

Expert and regular cleaning not only maintains the aesthetic and representative finish of stove-lacquered surfaces, but also preserves their value and service life by removing dirt and aggressive deposits that are not washed away by rainwater.

Annual inspection

The inspection of roofing and walls should take place at least once a year. This will depend on local environmental conditions.

Cleaning

Annual cleaning is recommended. The surfaces should be cleaned either manually using a soft brush or by means of a high-pressure cleaner (max. 50 bar) with clean water. If necessary, a mild cleaning agent (pH 6-7) may be added, up to max. 10%. For details please contact your supplier. Cleaning should take place from top to bottom. After cleaning, rinse with clean water to remove any cleaning agent residue. Generally, we recommend trying out the cleaning agent on an unobtrusive part of the object to be cleaned to check whether the surface appearance is affected.

Do not clean surfaces heated by the sun (> 40 °C) – the quick drying process may cause blemishes!

Cleaning agents

For information such as a list of neutral cleaning agents for organically coated aluminium components or addresses of approved cleaning companies, please contact
Gütegemeinschaft Reinigung von Fassaden e. V. (GRM), www.grm-online.de

Please observe the manufacturer's cleaning and safety instructions!

Non-suitable cleaning agents

Please do not use highly alkaline cleaning agents such as potassium hydroxide, sodium carbonate or caustic soda, any strong acid products or highly abrasive cleaning agents such as household cleaning products that corrode paint.

Removal of graffiti

As a general rule, the following cleaning steps will enable you to remove graffiti from stove-lacquered, ALUCOBOND® fluorocarbon surfaces.

Preferably, a test should be carried out on a small area first:

1. Remove any coarse particles of dirt with water to prevent the surface from being scratched during the following cleaning steps. Then wipe the panels dry.
2. Apply solvents to the sprayed graffiti using cellulose wadding soaked in a solvent (for suitable solvents please see the list). The solvent is rubbed in until the sprayed graffiti has largely been dissolved and can no longer be recognized in its original appearance.

3. Remove the mixture of lacquer and solvent using dry, cellulose wadding. Renew the cellulose wadding, if required.
4. Clean the surface again using clean, cellulose wadding moistened with small amounts of solvent until any remaining lacquer has been removed.
5. The ALUCOBOND® coating then needs to regenerate for at least 24 hours, independent of the cleaning result reached. Owing to the absorption of solvent, the ALUCOBOND® coating is swollen and in this state it is sensitive to mechanical stress. The swelling is reversible and has no influence on the long-term stability of the lacquer coating.
6. If there is any remaining paint, steps 2-4 should be repeated, but not until the lacquered coating has regenerated.

General information
After cleaning, traces or shaded parts of the former graffiti are possibly still visible on the ALUCOBOND® coating. This appearance is caused by organic dyes that can be in the spray paint and are slightly susceptible to migration. Therefore, cleaning should take place as soon as possible to prevent the spray paint from migrating. According to experience, however, these dyes are only slightly lightfast; subsequently, the dye susceptible to migration is altered and decomposed by solar radiation, thus causing the shading effect to disappear.

Large areas of graffiti sometimes lead to producing considerable amounts of cellulose wadding containing residues of solvent and paint. Larger amounts have to be disposed of properly according to Waste Code No. 18702.

Attention:
- The recommended solvents are inflammable!
- Do not smoke under any circumstances near the solvents or during work!
- Make sure to allow for good ventilation! Where the exchange of air is restricted, e.g. pedestrian subways, solvent vapours can accumulate – Danger of explosion!

Suitable solvents depending on the lacquer quality*)
- Ethanol (methylated spirits) for slight soiling
- Hexane (petroleum ether or white spirit)
- Methyl glycolic acid
- Graffiti Neumann GmbH, DEKONTAMINOL

*) ALUCOBOND® has been certified by the laboratories of Dr. Kupfer, Berlin, as having an anti-graffiti effect that complies with the requirements of the RAL-Gütegemeinschaft (Quality Assurance Association)

For further information, e.g. cleaning agents or addresses of approved cleaning companies, please contact:
RAL–Gütegemeinschaft Anti-Graffiti e. V., www.anti-graffiti-verein.de

FACADE - STANDARD DESIGNS

Tray panels suspended on bolts,
vertical panel layout

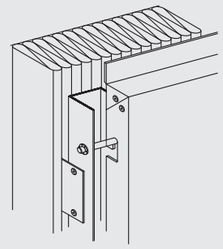

Tray panels blue clip with joints
open to the wind,
horizontal panel layout

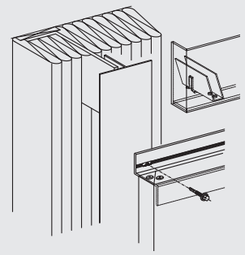

Tray panels SZ 20,
horizontal panel layout

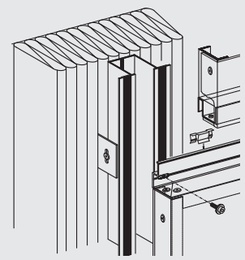

Riveted / screwed to vertical
supporting sections

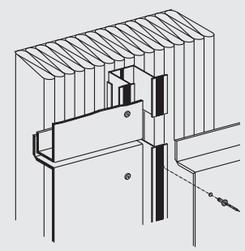

Riveted to T-sections,
closed joints,
vertical / horizontal panel layout

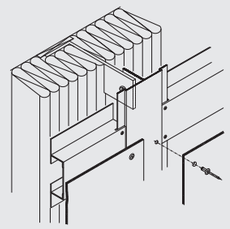

FACADE - STANDARD DESIGNS

Riveted to Omega sections,
open joints,
vertical / horizontal panel layout

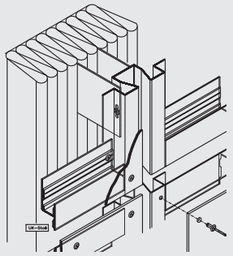

Bonded to T-sections,
vertical / horizontal panel layout

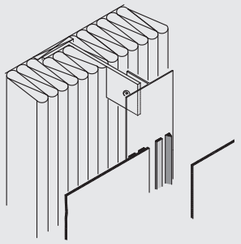

Clinkered facades,
horizontal panel layout

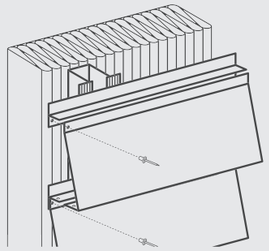

Screwed tray panel,
vertical panel layout

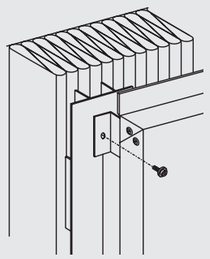

TECHNICAL DATA SHEET

ALUCOBOND® PLUS

Thickness	Standard	Unit	3 mm	4 mm
Thickness, cover sheet		mm	0.50	
Weight		kg / m²	5.9	7.6
Fabrication width		mm	1 250 / 1 500	
Technological values				
Section modulus **(W)**	DIN 53293	cm³ / m	1.25	1.75
Rigidity **(E·I)**	DIN 53293	kNcm²/m	1 250	2 400
Alloy	EN 573-3		EN AW-5005A (AlMg1)	
Temper of cover sheets	EN 515		H22 / H42	
Modulus of elasticity	EN 1999 1-1	N / mm²	70 000	
Tensile strength of cover sheets	EN 485-2	N / mm²	$R_m \geq 130$	
Proof stress (0.2 %)	EN 485-2	N / mm²	$R_{p0.2} \geq 90$	
Elongation	EN 485-2	%	$A_{50} \geq 5$	
Linear thermal expansion	EN 1999 1-1		2.4 mm/ m bei 100 °C temperature difference	
Core				
Mineral-filled polymer				
Surface				
Lacquering			Coil Coating. Fluoro-carbon (e.g. PVDF)	
Gloss (initial value)	EN 13523-2	%	30 – 80	
Pencil hardness	EN 13523-4		HB – F	
Acoustical properties				
Sound absorption factor **(α_s)**	ISO 354		0.05	
Sound reduction index **(R_w)**	ISO 717-1	dB	≥ 25	
Loss factor **(d)**	EN ISO 6721		--	
Thermal properties				
Thermal resistance **(R)**	DIN 52612	m²K / W	0.007	0.009
Thermal conductivity **(λ)**	DIN 52612	W / mK	0.49	0.44
Heat transition coefficient **(U)**	DIN 52612	W / m²K	5.68	5.58
Temperature resistance		°C	-50 … +80	

TECHNICAL DATA SHEET

ALUCOBOND® A2

Thickness	Standard	Unit	3 mm	4 mm
Thickness		mm	0.50	
Weight		kg / m²	5.9	7.6
Fabrication width		mm	1 250 / 1 500	
Technological values				
Section modulus **(W)**	DIN 53293	cm³ / m	1.25	1.75
Rigidity **(E·I)**	DIN 53293	kNcm²/m	1 250	2 400
Alloy	EN 573-3		EN AW-5005A (AlMg1)	
Temper of cover sheets	EN 515		H22 / H42	
Modulus of elasticity	EN 1999 1-1	N / mm²	70 000	
Tensile strength of cover sheets	EN 485-2	N / mm²	$R_m \geq 130$	
Proof stress (0.2 %)	EN 485-2	N / mm²	$R_{p0.2} \geq 90$	
Elongation	EN 485-2	%	$A_{50} \geq 5$	
Linear thermal expansion	EN 1999 1-1		2.4 mm/ m bei 100 °C temperature difference	
Core				
Mineral compound, polymer bonded				
Surface				
Lacquering			Coil Coating. Fluoro-carbon (e.g. PVDF)	
Gloss (initial value)	EN 13523-2	%	30 – 80	
Pencil hardness	EN 13523-4		HB – F	
Acoustical properties				
Sound absorption factor **(α_s)**	ISO 354		0.05	
Sound transmission loss **(R_w)**	ISO 717-1	dB	27	27
Loss factor **(d)**	EN ISO 6721		0.004	0.005
Thermal properties				
Thermal resistance **(R)**	DIN 52612	m²K / W	0.002	0.002
Thermal conductivity **(λ)**	DIN 52612	W / mK	1.99	1.77
Heat transition coefficient **(U)**	DIN 52612	W / m²K	5.83	5.80
Temperature resistance		°C	-50 … +80	

INTERNET ADDRESSES

MACHINES

Vertical panel saws
www.holzher.de
www.striebig.com

CNC machining centres
www.holzher.de
www.portatec.de
www.homag.de
www.mecanumeric.fr
www.promak.it
www.flexicam.de
www.casadei-industria.it

Sawing machines
www.pressta-eisele.de
www.bergundschmid.de

Festool panel saws, machines
www.festool.de

Bosch Machines
www.bosch-pt.de

Punching machines, hydr./pneum., Hand lever notching machines, Hand lever punching machines
www.edel-stanztec.de
www.liechtblick.ch

Roll bending machines
www.knuth.de

Special roll bending machines
www.kuttruff-maschinenbau.de

Brake presses
www.knuth.de
www.amada.de
www.trumpf.com

Dust extractor systems
www.schuko.de
www.al-ko.de
www.get-guhl.de

Mobile dust extractors for small machines
www.festool.de

Rivet attachment jigs
www.gesipa.com
www.honsel.de
www.vvg-befestigungstechnik.de
www.titgemeyer.de

TOOLS

Saw blades
www.leuco.com
www.ake.de
www.festool.de

Jig saw blades
www.festool.de
www.bosch-pt.de

Cutter disks
www.agefa.de
www.leuco.com

End milling cutters for hand routing machines / CNC machining centres
www.gis-tec.de
www.festool.de

Single flute cutters for CNC machining centres
www.gis-tec.de
www.leitz.org
www.crown-norge.no

Rivet attachment jigs, drilling jigs
www.mbe-gmbh.com
www.haspo.ch

Drills with centring point
www.dewalt.de

ACCESSORIES

Aluminium blind rivets lacquered in standard colours
www.mbe-gmbh.com
www.sfsintec.biz
www.ejot.de
www.haspo.ch

Aluminium blind rivets
www.gesipa.com
www.honsel.de
www.vvg-befestigungstechnik.de
www.titgemeyer.de

Fascia screws
www.ejot.de
www.sfsintec.biz
www.mbe-gmbh.com
www.magefast.de

Structural sealants
www.dichten-und-kleben.de
www.sika.com
www.mbe-gmbh.com
www.bostik.de
www.teroson-bautechnik.de

Metal adhesives
www.loctite-europe.com

Structural Cladding Tape
www.dichten-und-kleben.de
www.3m.com

Double-sided adhesive tape Velcro tape
www.3m.com
www.tesa.de

Sealing tapes
www.iso-chemie.de
www.technoplast-gmbh.de

Starlock washers
www.titgemeyer.de

Tray panel corner sheets
www.aluform-gmbh.de
www.liechtblick.ch

Thermostops for wall holders
www.thermostop.de
www.isowa.de
www.thermostop-plus.com

Bolts
www.fischerduebel.de
www.hilti.de
www.wuerth.com
www.ejot.de
www.mkt-duebel.de

Connection systems for exhibition display stands
www.klemproducts.de
www.irus-system.de
www.voluma.net

Workshop equipment, Panel transport cart
www.kaiserkraft.de

SECTIONS

ALUCOBOND® special sections
www.alucobond.de
(ALUCOBOND® profiles and fittings)

Façade substructures
www.athens-hoevelhof.de
www.bwm.de
www.eurofox.com
www.keune-kantprofile.de
www.montaflex.de
www.nauth.de
www.pohlnet.com
www.u-kon.com
www.wagner-system.com

Aluminium sections
www.allega.ch
www.amari.at
www.amari.de
www.gemmel-metalle.de
www.mejo.de
www.spaeter.de
www.thyssenkruppschulte.de
www.wmh.de

Structural sections
www.protektor.com

Window sills
www.rbb-aluminium.de

Section systems
www.octaStandard.de
www.mero.de
www.syma.de

Perforated plates
www.mevaco.de
www.moradelli.de
www.rmig.com

Bending of sections (e.g. SZ 20 sections)
www.bms-biegetechnik.de
www.aluform-gmbh.de

INFORMATION

INFORMATION (please request)

- ALUCOBOND® product information
- ALUCOBOND® colour charts
- ALUCOBOND® "Architecture in Detail" CD
- ALUCOBOND® Documentation folder containing examples of façade applications and texts with "Architecture in Detail" CD
- ALUCOBOND® static folder
- ALUCOBOND® Original samples of standard surfaces

Our brochures are also available at
www.alucobond.com DOWNLOADS

CREATE THE DIFFERENCE

VERSATILE ON PRINCIPLE

ALUCOBOND® excels with a wide range of simple processing and installation options that can be realized using conventional tools of metal and façade builders, sometimes even directly on the building site.

Futuristic architecture with an outer skin made of ALUCOBOND®: the Hotel Lindner Seepark in Klagenfurt, Austria

Trecolore architects:
Architekturbüro Dorn Ziviltechniker GmbH in Annenheim, Austria

The material can be sawn, milled, folded and bent. It can either be riveted or screwed to the substructure or installed as a suspended tray panel. Additionally, the aluminium composite panel is available as a flame-resistant and non-combustible version to comply with the respective country-specific, fire protection requirements for buildings. Beside these excellent product and processing properties, ALUCOBOND® enables maximum creativity. Projects which were often thought to be economically or technically impossible, or difficult to achieve, have now become reality thanks to ALUCOBOND®.

SUSTAINABLE BY CONVICTION

Ecological sustainability is a key objective for 3A Composites. For decades, we have felt committed to the environment and to future generations. And we are proud of the fact that with ALUCOBOND®, 3A Composites is recognised worldwide today, as one of the leading companies in the field of sustainability.

Award-winning environmental awareness: The Immeuble Bonne Energie in Grenoble, France

Architect Charon et Rampillon – Grenoble, France

CREATE THE DIFFERENCE

Our aim is to satisfy the highest demands as regards the economic, social and ecological aspects. Throughout the entire life cycle of ALUCOBOND® composite panels, no environmentally hazardous substances are set free. After a long service life, they are fully recyclable and can be used in the production of new material. Compliance with current energy guidelines can be achieved without any problem with ALUCOBOND® and a rear-ventilated façade.

TRADITIONALLY INNOVATIVE

The development of ALUCOBOND® more than forty years ago was, in fact, a minor revolution - an innovative, aluminium composite material as a material combination, that was lightweight, rigid, excellently formable and at the same time, corrosion-resistant and recyclable.

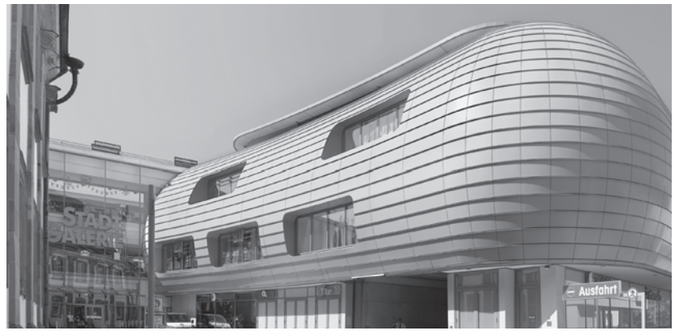

A new accent on urban development in the heart of the City:
the Stadtgalerie Heilbronn, Germany

Planning/construction supervision Blocher Blocher Partners, Stuttgart in cooperation with ECE Projektmanagement – Hamburg, Germany

These outstanding features are still impressing architects, designers and building owners now, just as they did then. Ever since it was launched on the market, ALUCOBOND® has been influencing modern architecture all over the world with an exceptional façade design and has long since been firmly established in interior design. As a market leading multi-talent, ALUCOBOND® has been extremely successful owing to the constant, innovative further development of the product and surfaces. These successes serve our Innovation Team as an incentive for continuing to develop market-oriented innovations.

COST-EFFECTIVENESS GAINED BY EXPERIENCE

More than 40 years of experience give us the confidence to be able to offer you a perfected and tested product of consistently high quality.

Even after decades of exposure, ALUCOBOND® helps to maintain the value of a property's external appearance – without the enormous maintenance costs that many alternative solutions incur. If, alongside the investment costs, the low maintenance costs and the energy efficiency are also taken into consideration, a calculation results that is impressive in terms of cost efficiency, particularly for large-scale projects.

Long-term renewal and maintenance with cost-effective modernisation using ALUCOBOND®: Höxterstraße in Hagen, Germany

Planning/construction supervision
Stadtbildplanung
Dortmund – Dortmund, Germany